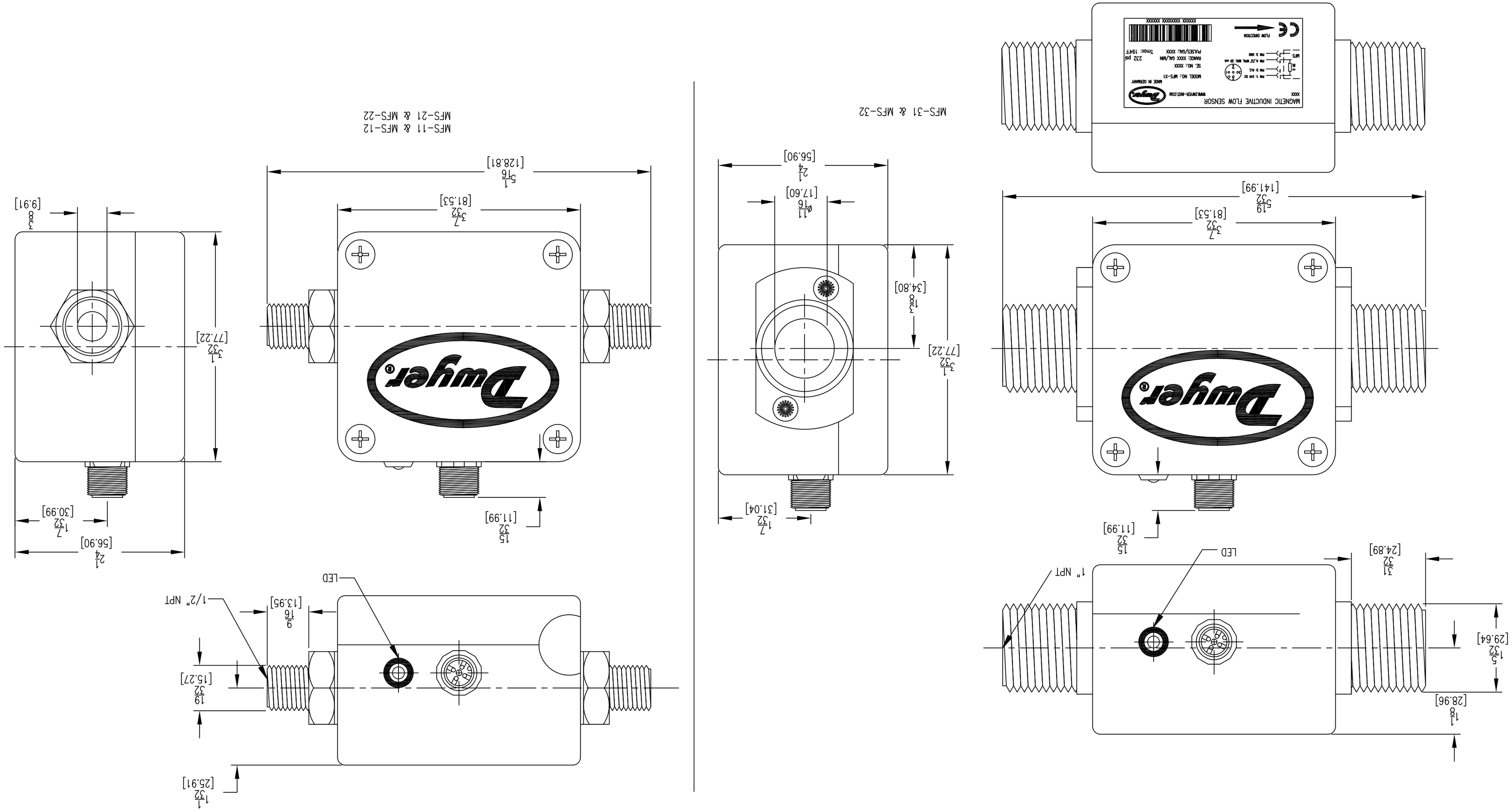

SCALE 1:1

⊘ = CRITICAL DIMENSION
STANDARD TOLERANCES UNLESS NOTED:
ALL DECIMAL DIMENSIONS ± .005
ALL ANGLES ± 1°

MATERIAL

NAME	ARTWORK MAGNETIC INDUCTIVE FLOW SENSOR (FOR REFERENCE ONLY)
DATE	
DWN BY	
CHKD	
APPD	
FINISH	

DWYER INSTRUMENTS, INC.
MICHIGAN CITY, INDIANA 46360 U.S.A.

ACAD2002

NO.	CHANGES	BY/DATE

NOTICE: This drawing and the principles and elements of design embodied therein are the exclusive property of DWYER INSTRUMENTS, INC. and are not to be communicated, disclosed, reproduced or used except as previously authorized in writing by such corporation and must not be submitted to outside parties for examination without the written consent of said corporation.

FR. NO. R2-701050-00 | 3

R2-701050-00

R2-701050-00